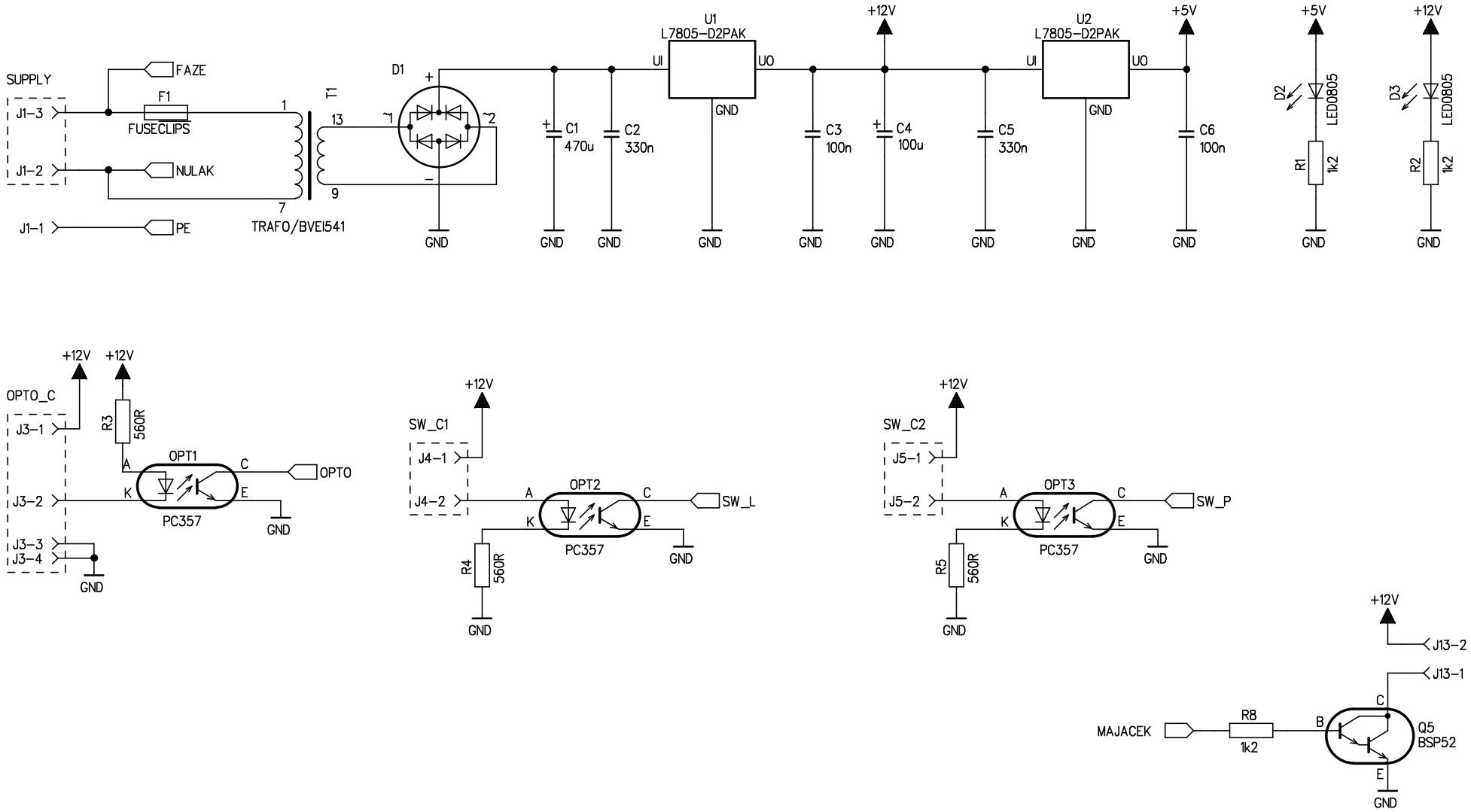
SUPPLY
J1-3
J1-2
J1-1
FAZE
F1
FUSECLIPS
NULAK
PE
T1
TRAFO/BVEI541
D1
GND
C1
470u
C2
330n
U1
L7805-D2PAK
UI
UO
+12V
C3
100n
C4
100u
C5
330n
U2
L7805-D2PAK
+5V
C6
100n
D2
LED0805
R1
1k2
D3
LED0805
R2
1k2
OPTO_C
J3-1
J3-2
J3-3
J3-4
R3
560R
OPT1
PC357
OPTO
SW_C1
J4-1
J4-2
OPT2
SW_L
R4
560R
SW_C2
J5-1
J5-2
OPT3
SW_P
R5
560R
J13-2
J13-1
MAJACEK
R8
1k2
Q5
BSP52

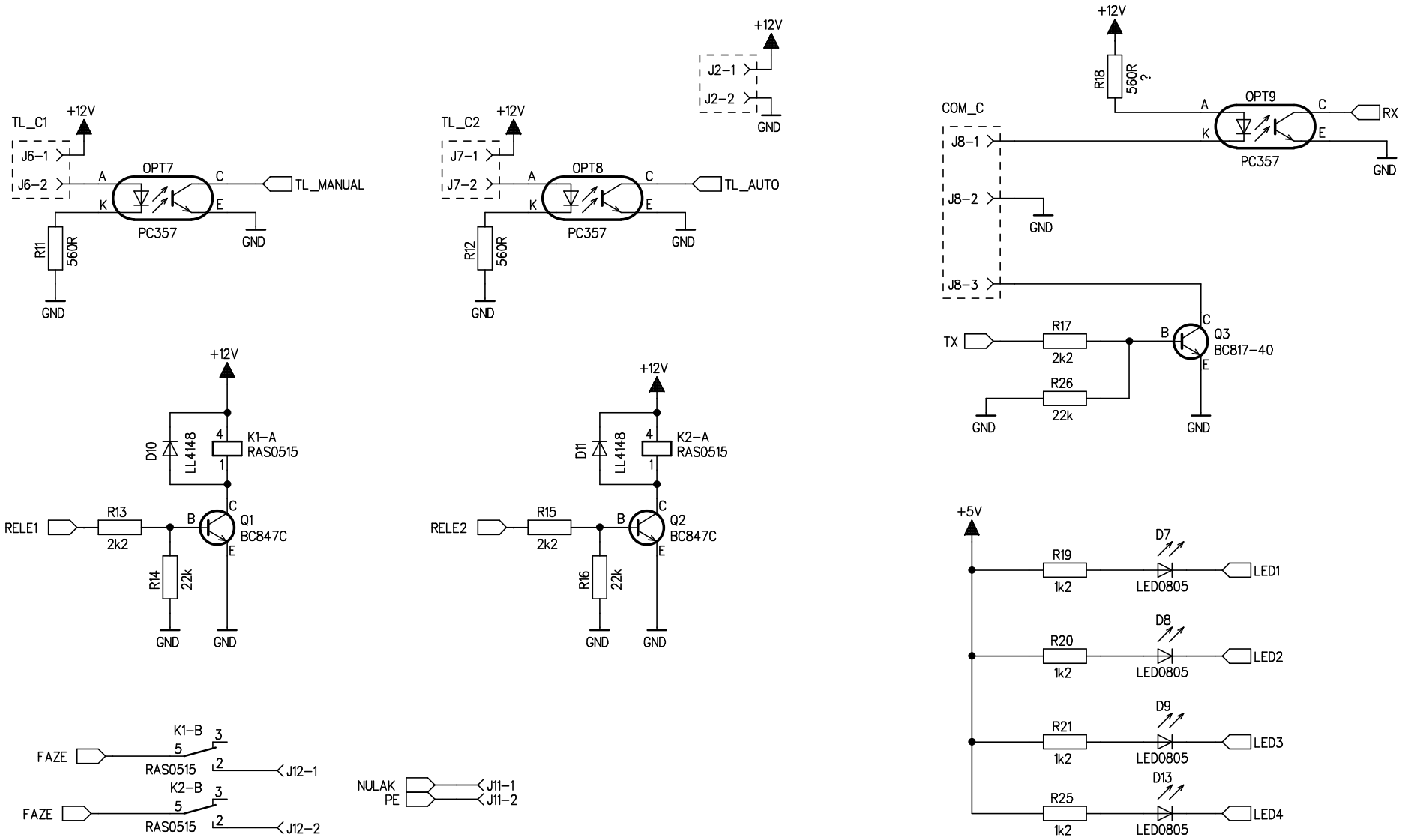
TL_C1
+12V
J6-1
J6-2
OPT7
A
K
C
E
PC357
TL_MANUAL
R11
560R
GND
TL_C2
J7-1
J7-2
OPT8
TL_AUTO
R12
J2-1
J2-2
COM_C
J8-1
J8-2
J8-3
R18
560R
?
OPT9
RX
TX
R17
2k2
R26
22k
Q3
BC817-40
D10
LL4148
K1-A
RAS0515
RELE1
R13
Q1
BC847C
R14
D11
K2-A
RELE2
R15
Q2
R16
+5V
R19
1k2
D7
LED0805
LED1
R20
D8
LED2
R21
D9
LED3
R25
D13
LED4
K1-B
FAZE
RAS0515
J12-1
K2-B
J12-2
NULAK
PE
J11-1
J11-2

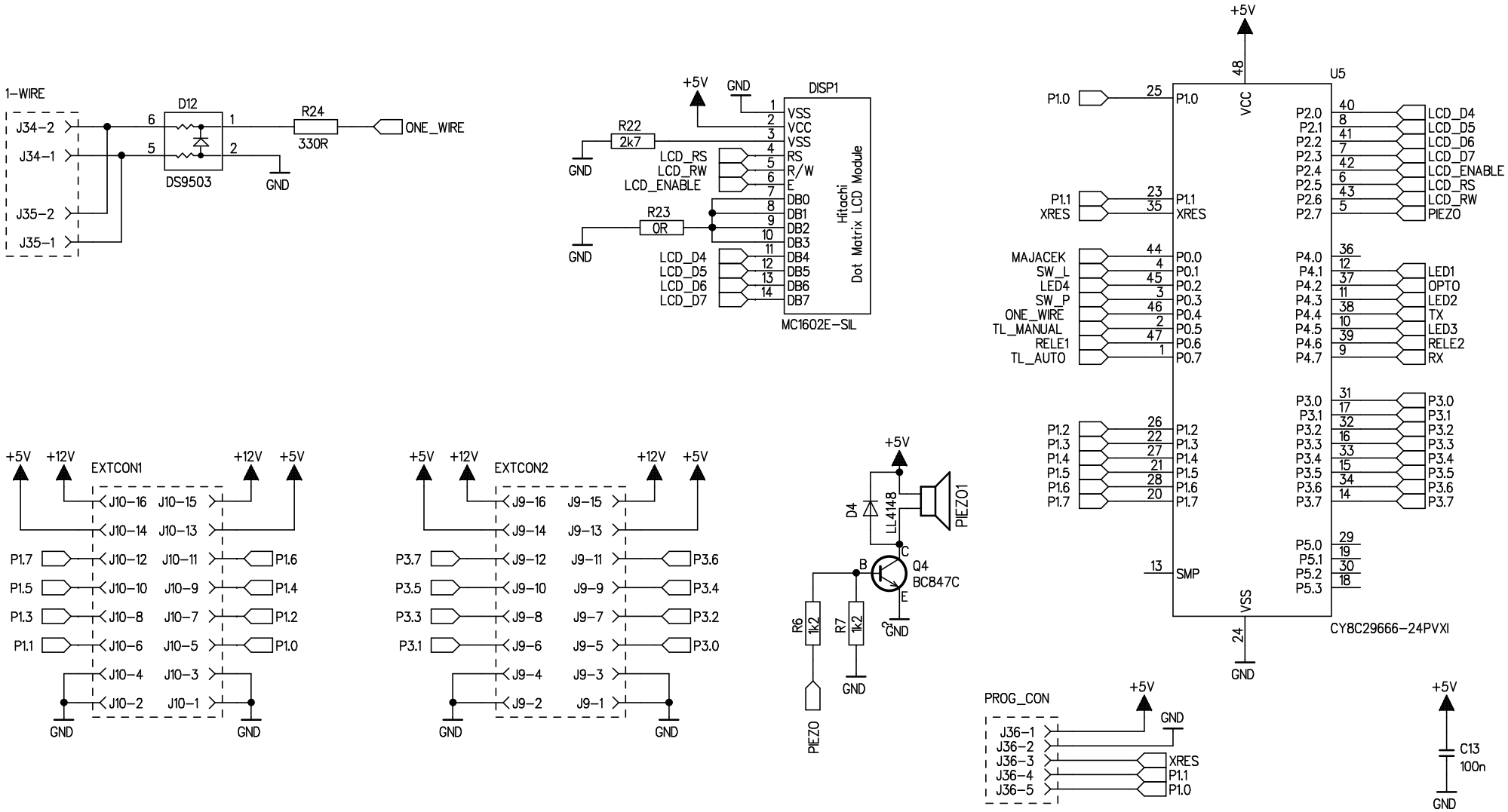
1-WIRE
J34-2
J34-1
J35-2
J35-1
D12
DS9503
R24
330R
ONE_WIRE
GND
+5V
DISP1
VSS
VCC
VSS
RS
R/W
E
DB0
DB1
DB2
DB3
DB4
DB5
DB6
DB7
Hitachi
Dot Matrix LCD Module
MC1602E-SIL
R22
2k7
R23
0R
LCD_RS
LCD_RW
LCD_ENABLE
LCD_D4
LCD_D5
LCD_D6
LCD_D7
U5
VCC
VSS
SMP
P1.0
P1.1
XRES
MAJACEK
SW_L
LED4
SW_P
ONE_WIRE
TL_MANUAL
RELE1
TL_AUTO
P1.2
P1.3
P1.4
P1.5
P1.6
P1.7
P0.0
P0.1
P0.2
P0.3
P0.4
P0.5
P0.6
P0.7
P2.0
P2.1
P2.2
P2.3
P2.4
P2.5
P2.6
P2.7
P4.0
P4.1
P4.2
P4.3
P4.4
P4.5
P4.6
P4.7
LED1
OPTO
LED2
TX
LED3
RELE2
RX
P3.0
P3.1
P3.2
P3.3
P3.4
P3.5
P3.6
P3.7
P5.0
P5.1
P5.2
P5.3
PIEZO
CY8C29666-24PVXI
EXTCON1
J10-16
J10-15
J10-14
J10-13
J10-12
J10-11
J10-10
J10-9
J10-8
J10-7
J10-6
J10-5
J10-4
J10-3
J10-2
J10-1
+12V
EXTCON2
J9-16
J9-15
J9-14
J9-13
J9-12
J9-11
J9-10
J9-9
J9-8
J9-7
J9-6
J9-5
J9-4
J9-3
J9-2
J9-1
D4
LL4148
PIEZO1
Q4
BC847C
R6
1k2
R7
1k2
PROG_CON
J36-1
J36-2
J36-3
J36-4
J36-5
C13
100n

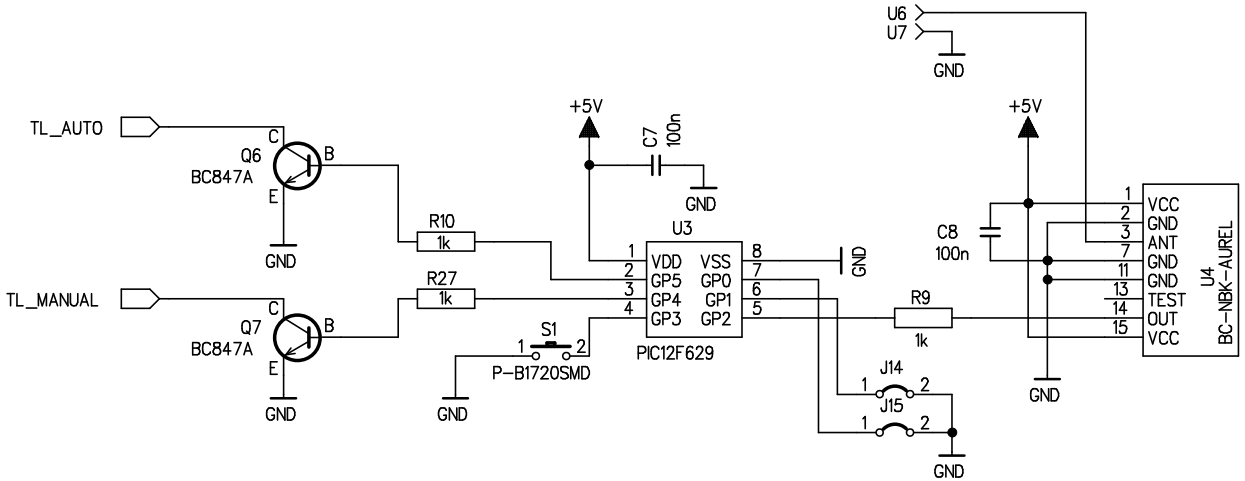
TL_AUTO
TL_MANUAL
Q6
BC847A
Q7
BC847A
C
B
E
GND
R10
1k
R27
1k
S1
P-B1720SMD
+5V
C7
100n
U3
VDD
VSS
GP5
GP0
GP4
GP1
GP3
GP2
PIC12F629
R9
1k
J14
J15
U6
U7
C8
100n
U4
BC-NBK-AUREL
VCC
ANT
TEST
OUT